# Appendix 28-B
## Typical Scaffolds and Accessories

**BRACING - TUBE & COUPLER SCAFFOLDS**

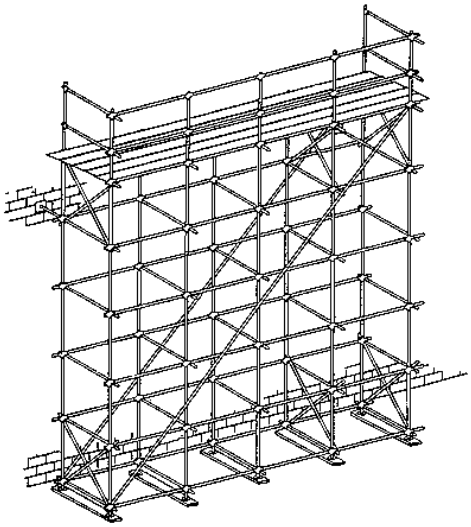

**SUSPENDED SCAFFOLD PLATFORM WELDING PRECAUTIONS**

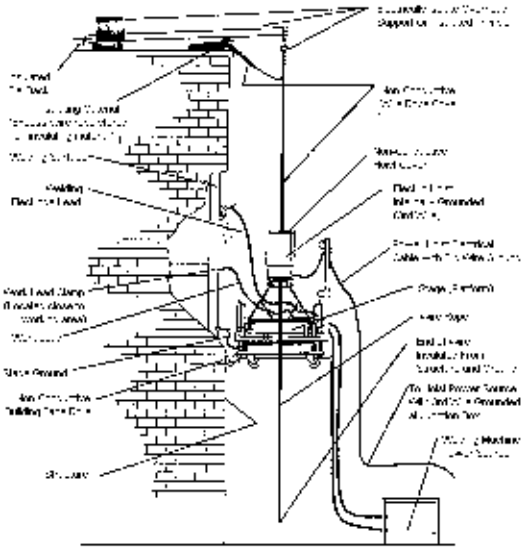

**SYSTEM SCAFFOLD**

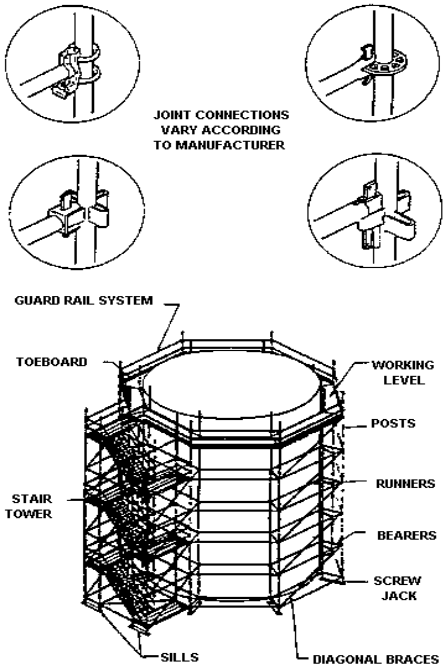


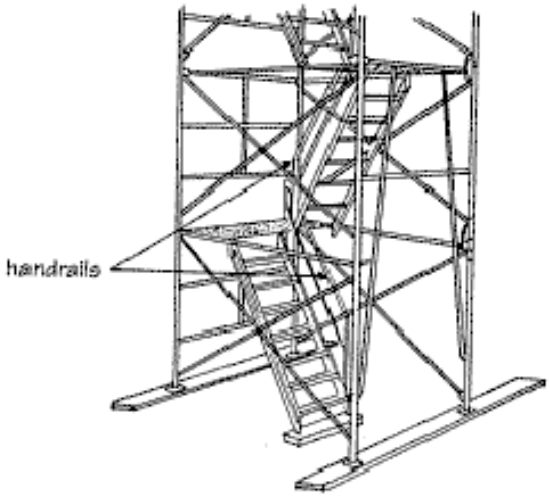


**Stairway Platforms**

**Appendix 28-B**
**Typical Scaffolds and Accessories**

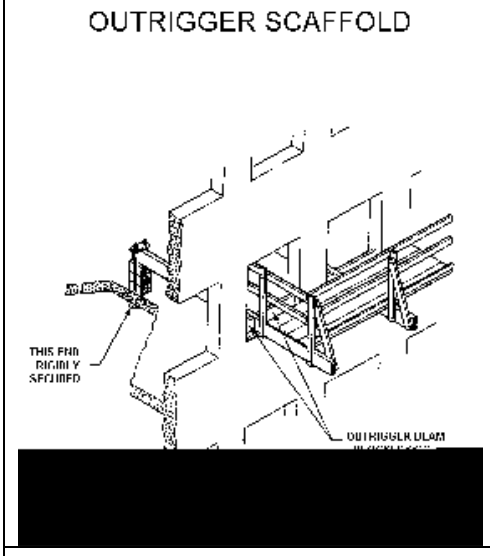


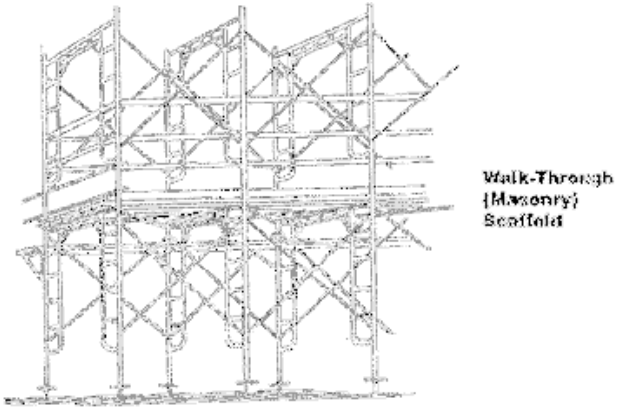


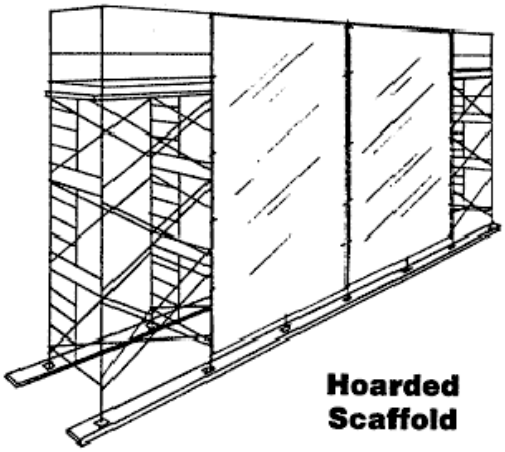

**Appendix 28-B**
**Typical Scaffolds and Accessories**

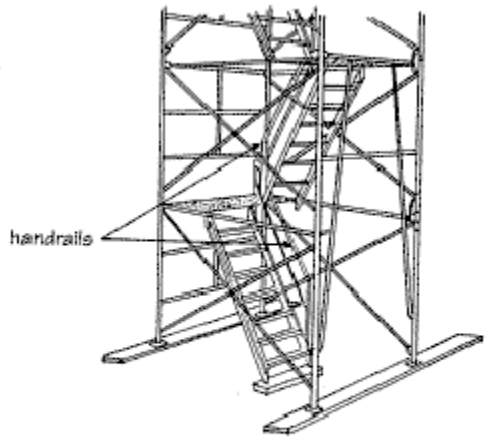


**Stairway Platforms**

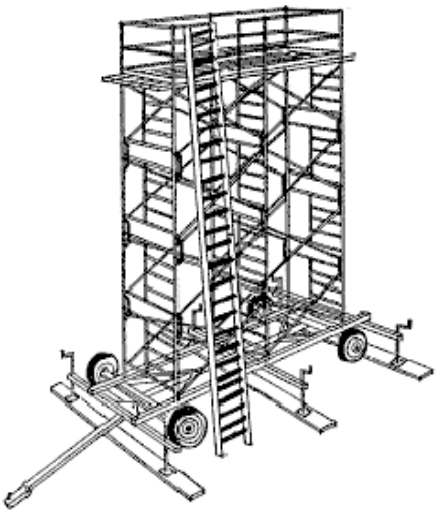

**Farm Wagon Type Scaffold**

TUBE and COUPLER SCAFFOLD

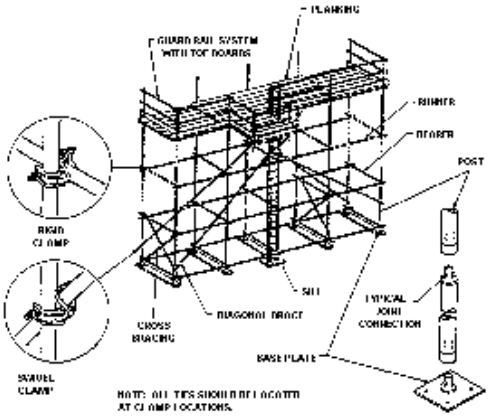


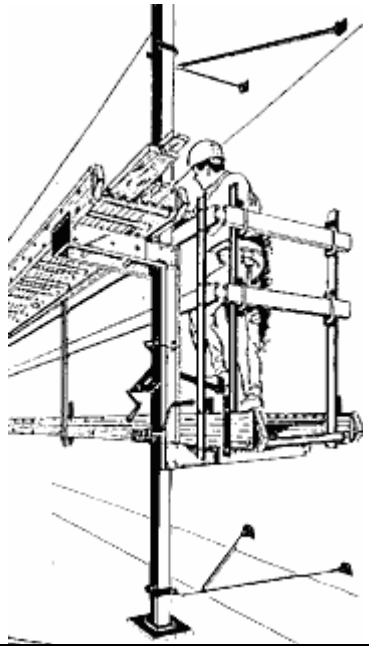

**Appendix 28-B**
**Typical Scaffolds and Accessories**

## Three Sided Scaffold – Window

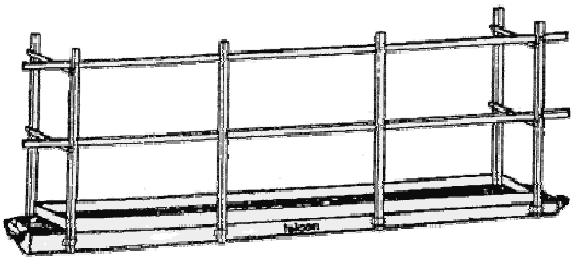

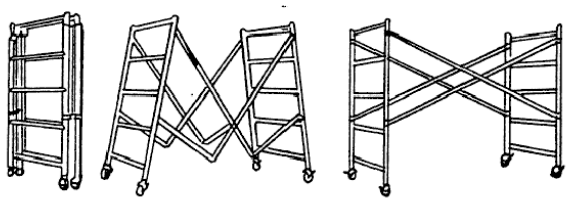

**Fold-up Scaffold**

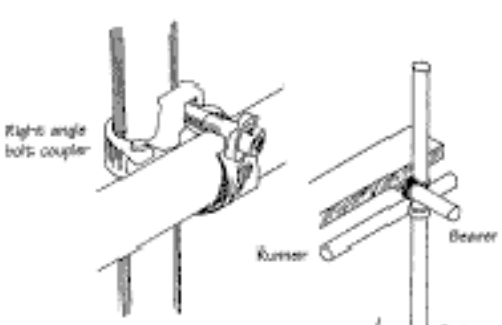


**Typical Tube and Clamp Connectors**

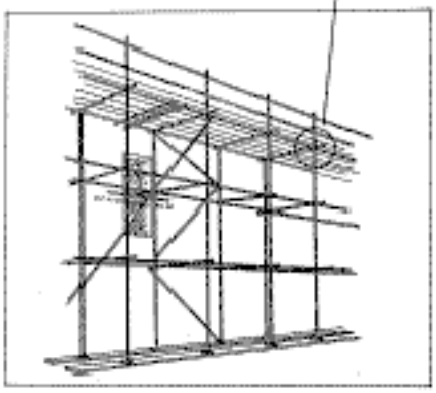

**Tube and Clamp Scaffold**

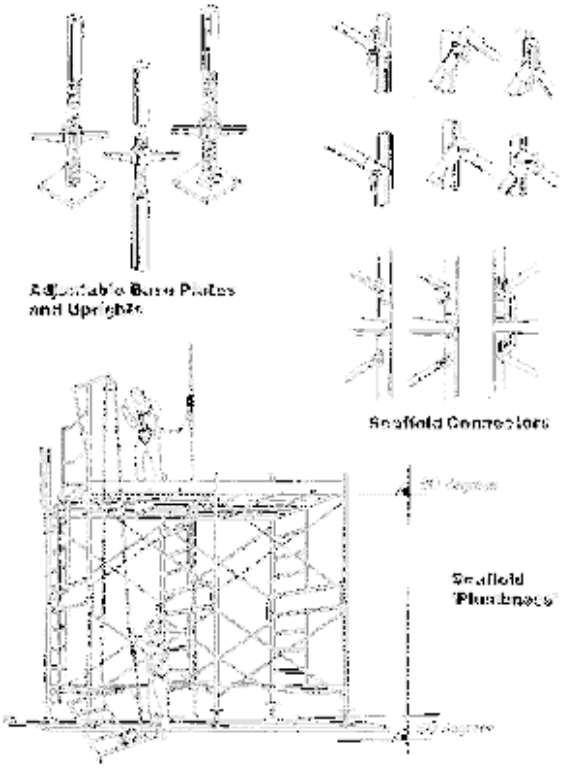

**Appendix 28-B**
**Typical Scaffolds and Accessories**

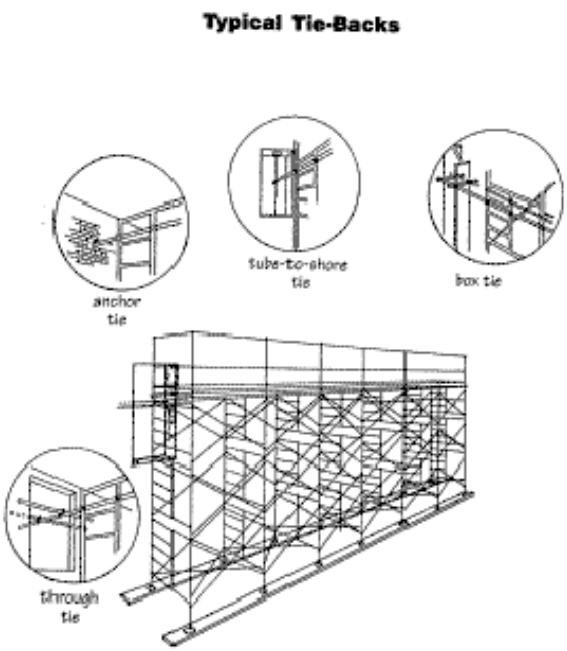

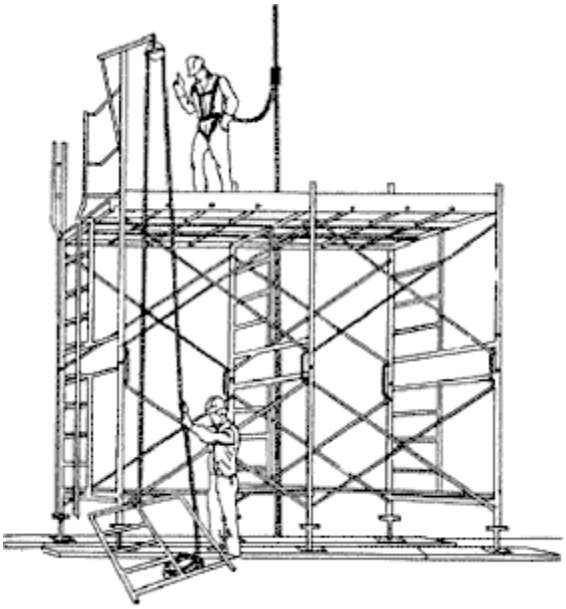

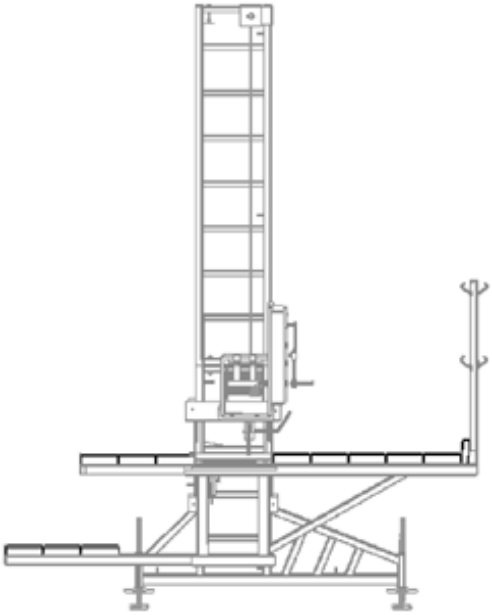

## Appendix 28-B
## Typical Scaffolds and Accessories

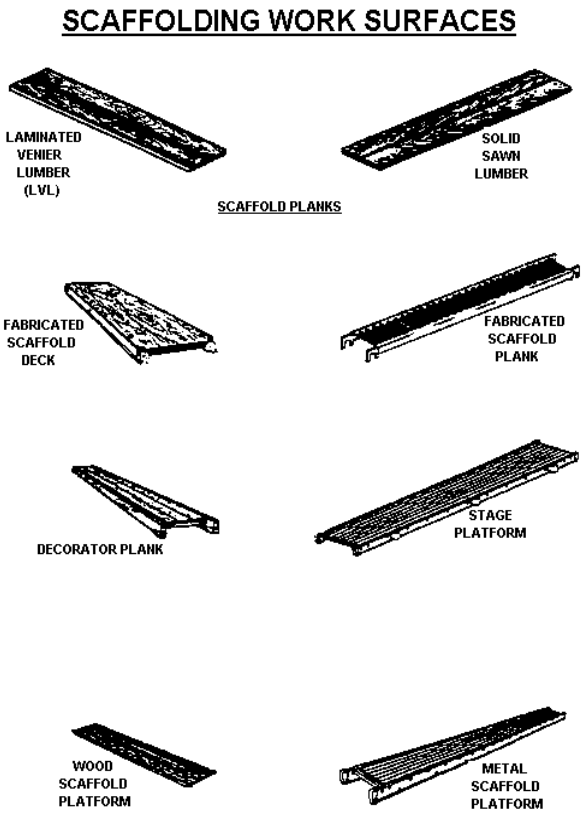


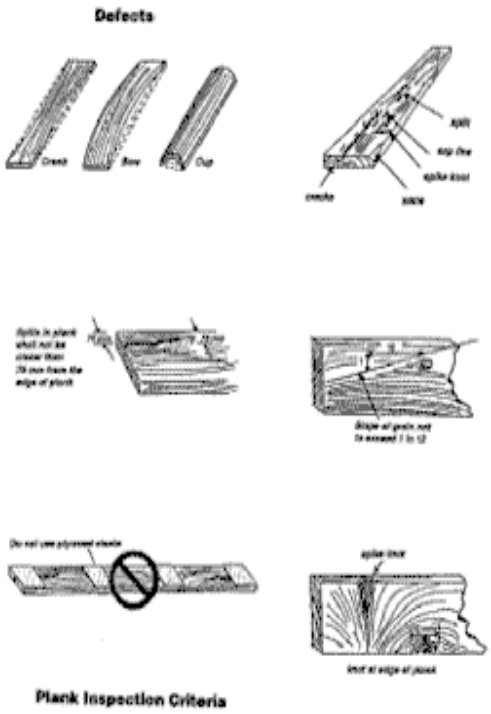

**Appendix 28-B**
**Typical Scaffolds and Accessories**

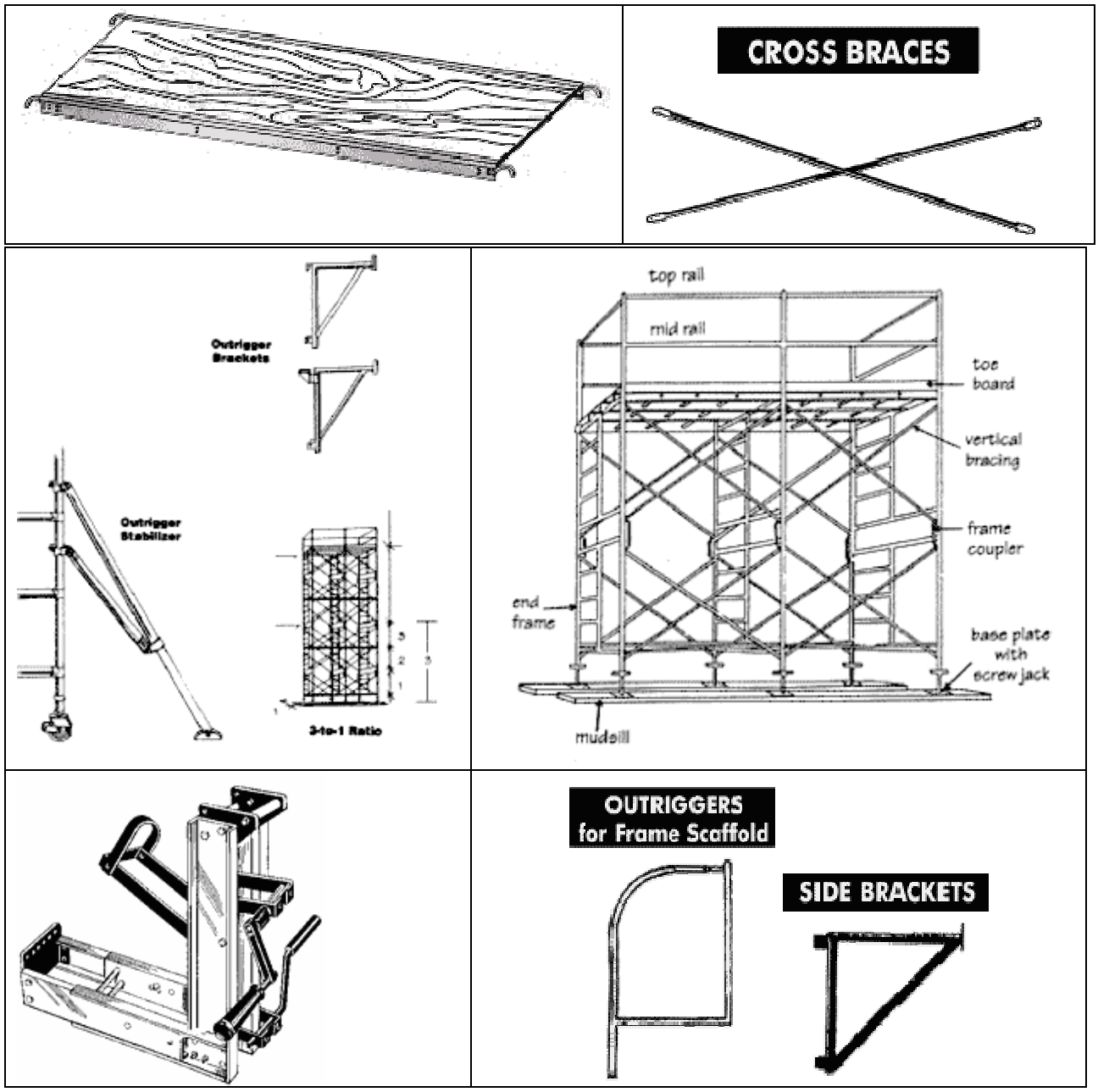

**Appendix 28-B**
**Typical Scaffolds and Accessories**

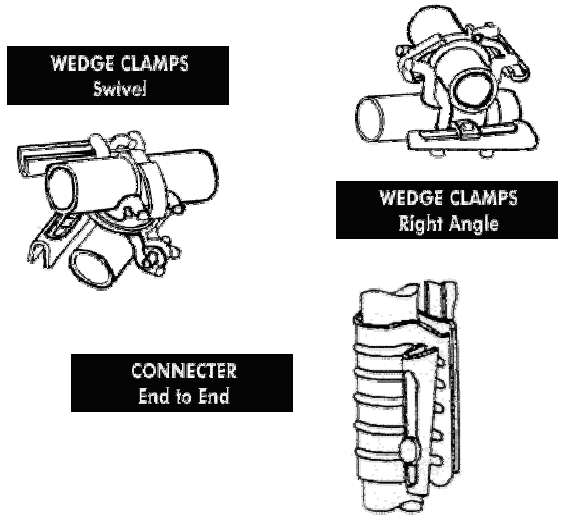


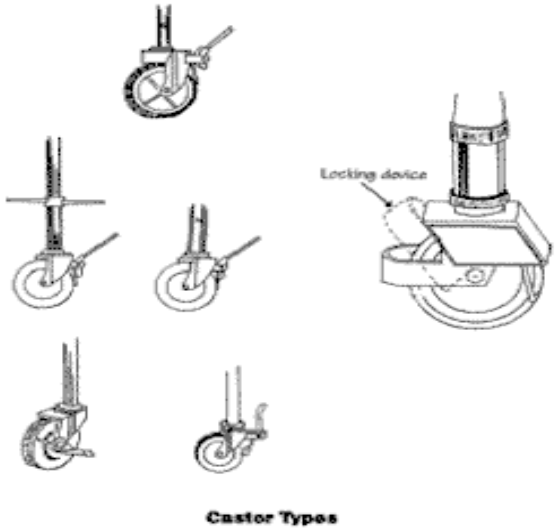


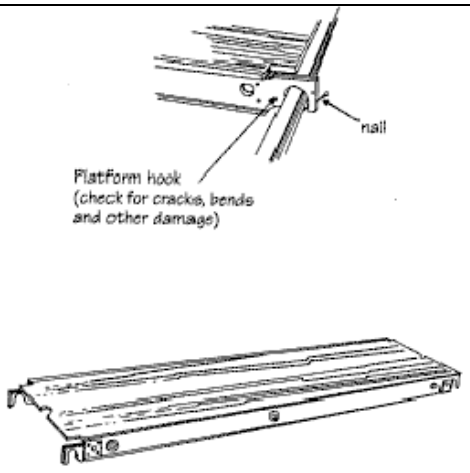


Aluminum/Plywood Platform

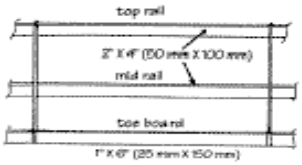


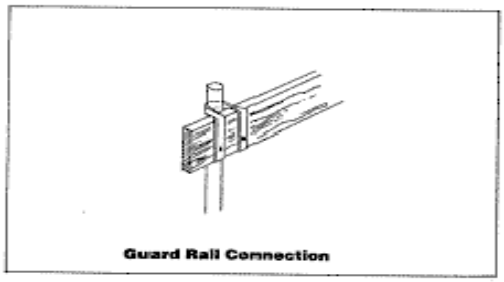
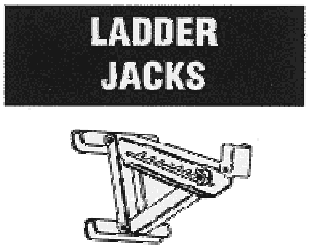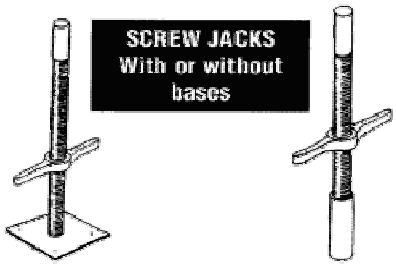
Guard Rail Connection